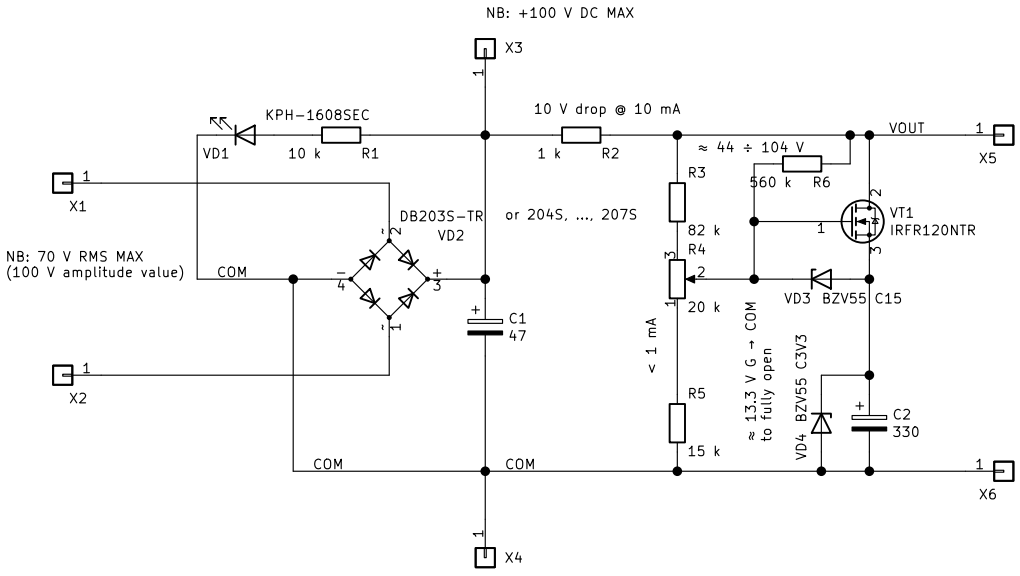

Input, output: up to 100 V DC

CC BY-SA 3.0+

Ivan Shmakov

Sheet: /

File: gutubha.sch

Title: Gutubha Linear Shunt Regulator

Size: A4	Date: 2022-02-25	**Rev:**
KiCad E.D.A. kicad 5.1.9+dfsg1-1		Id: 1/1