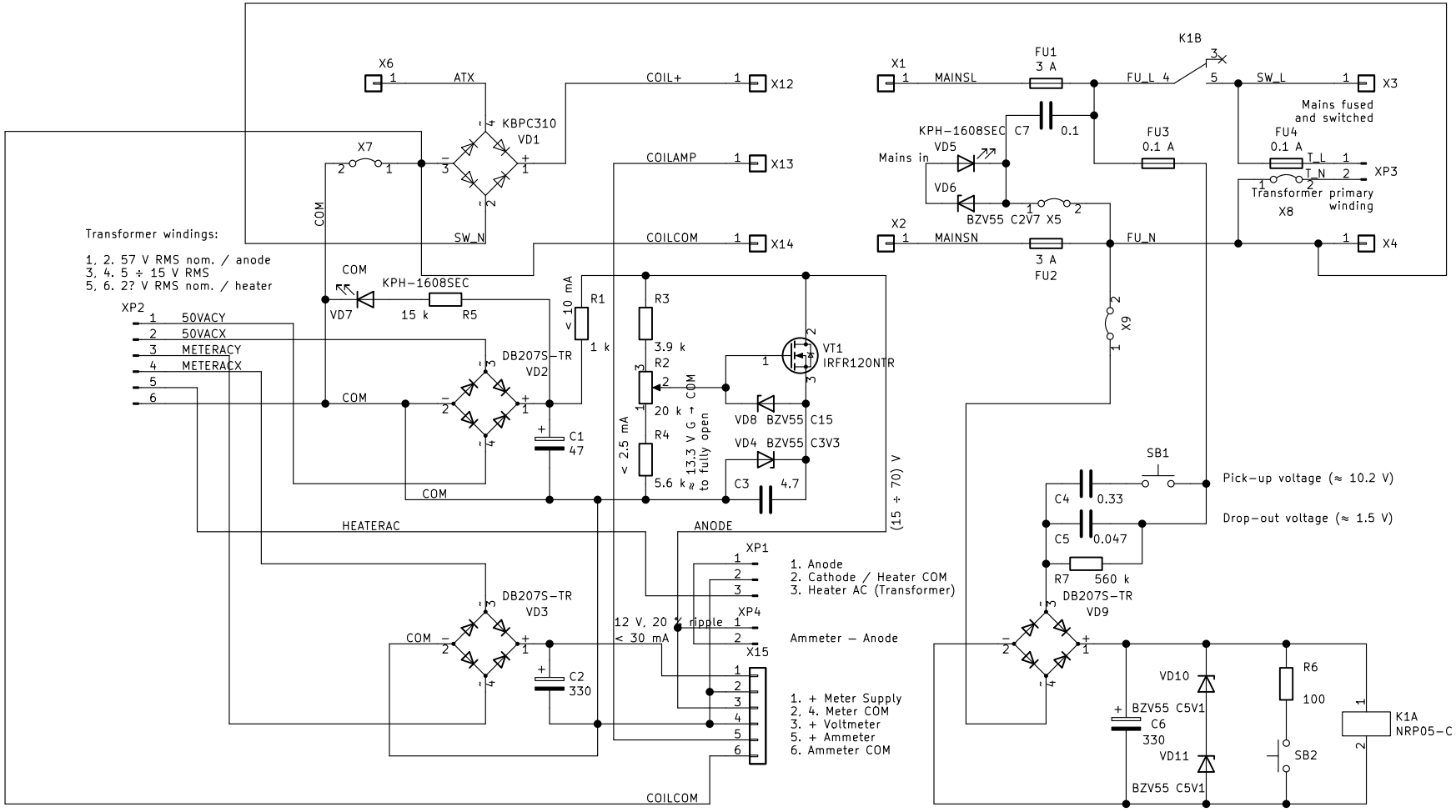

CC BY-SA 3.0+

Ivan Shmakov

Sheet: /
File: evrucky.sch

Title: Evrucky Vacuum Diode Examination Device PCB

Size: A4	Date: 2022-02-11	Rev:
KiCad E.D.A. kicad 5.1.9+dfsg1-1		Id: 1/1